EUROMETAUX
EUROPEAN ASSOCIATION OF METALS

# NON-FERROUS METAL INTERMEDIATES UNDER SCC
## Metal specificities in a nutshell

**January 2012**

The majority of the intermediates from the (non-ferrous) metals (NFM) industry are **UVCB** substances resulting from the metallurgic processing of primary (e.g. ores and concentrates) and secondary sources (recyclables).

Subsequent isolated and/or non-isolated intermediates occur during the smelting and refining steps of these materials to achieve pure substances that are mostly metals in massive form. Intermediates are produced in this respect during the smelting of material mixes (complex concentrates, recycled materials, fluxes) in various batch runs. Pyrometallurgical and hydrometallurgical techniques are often applied in a sequential way to concentrate and recover the metal from ore concentrates (primary smelters) or from secondary (recovered) materials. Several UVCB intermediates may be temporarily and consecutively formed at various stages of the production process.
All steps usually take place at the same industrial site and in the same or connected industrial area(s), with a large number of the intermediates smelted in a combined way**.**

A typical process chart is presented here below:

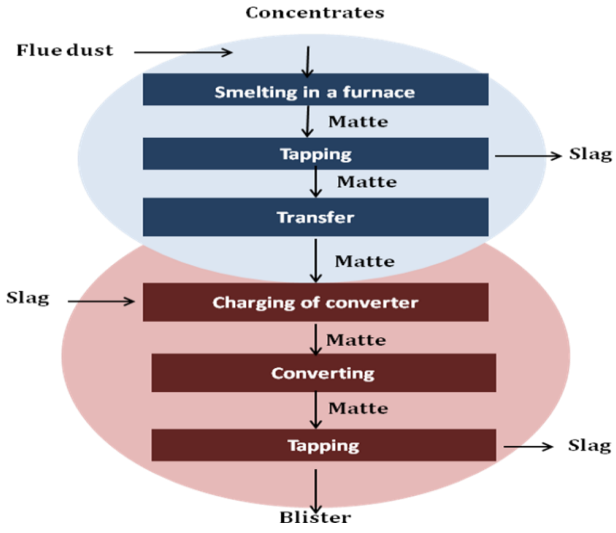


*Hazard profiles and related hazard classifications* (where appropriate) *are available* for intermediates based on the effects assessment files of their known constituents.





A number of metal specificities are critical to consider when assessing SCC for (non-ferrous) metal intermediates. The following specificities in particular have an impact on the design of the rigorous containment and worker's/environment protection: the existence of hazard knowledge, a physical form associated with a low emission potential, the use of LEV (level) 2 being considered as rigorous containment and finally the use of PPE.

Those four specificities are briefly reported and exemplified below.

1. **Hazard knowledge.**

Metal refining intermediates are ***typically UVCB substances***, and as such they are complex metal-containing materials with known, but variable, composition ranges of main and minor constituents. The chemistry and mineralogy of the materials, in combination with the mixture toxicity rules, are applied to define ***detailed and conclusive hazard classifications for each UVCB***.

Both the hazard of the UVCB and its "safe use" management for human health and environment will be driven by the hazard of the different constituents of the UVCB. The ***hazard properties*** of the constituents, documented in the often very extensive effects assessment (REACH registration) files, are used to derive/predict **the overall hazard of the smelted stream.** This hazard knowledge is also used for the rigorous containment design, often combining several containment strategies. It enables potential critical steps to be identified and addressed on a case by case basis, in addition, for example, to the largely automated processing systems largely operated from physically separated (air-conditioned) control rooms.

Examples:

- If the examination of the overall hazard of the stream of the UVCB points to the presence of a skin sensitisation (e.g. Ni in the case of slime) or skin corrosion hazard ( e.g. in case of slime), direct (skin) contact of the worker with the material will be avoided by the containment design and process:

| |
|---|
| - Automated processes are operated from a physically separate control room.<br>- The slime is removed from the bottom of the electrolytic cell by means of an automated sucking system (sludge remover), with automated transfer via pumping through closed pipes to an acid remover and sludge tanks for centrifugation and/or pressing.<br>- Sludge remover, acid remover, and decantation tanks are closed and connected by pipes.<br>- The pressed/filtered cake (water content ca. 20%) is periodically removed from the device and automatically transferred to containers |

This is further detailed in **Example 2**, included in **Annex 1, page 10**.

- If the hazard assessment reveals a dust inhalation hazard, processes will be designed to prevent exposure to dust – e.g. molten matte or dross from pyrometallurgical process

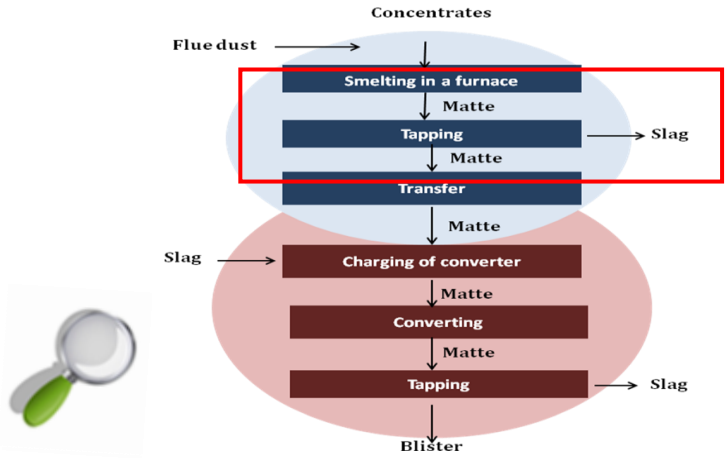


Smelting of concentrates to matte

- **Closed furnace** that contains the molten matte (as well as the concentrate and slag) and prevents emissions
- Operation under negative pressure to prevent fumes escaping (~ 50 Pa)
- Automated processes are operated from a physically separate control room
- Off-gas from smelting is captured completely and cleaned in a sequential gas and post-cleaning system

Tapping

- Semi-automated process control
- LEV located above the tapping hole for effective hot air capture
- Matte is transferred from the furnace to the ladle through an enclosed launder/tunnel
- The ladle is placed in an isolator during tapping: housing with a movable door and hood in the ladle loading area
- Furnace and enclosures are maintained under negative air pressure to prevent leakage/ensure optimal exhaust collection efficiency
- Off-gas from tapping is captured completely and cleaned in a sequential gas and post-cleaning system

During tapping operations, workers are generally in air-conditioned cabins. **Workers do not directly handle the substance, but need to be in the tapping area to open/close the tapping hole, and for temperature measurement and sampling.**

This is further illustrated in **Example 1** page 3, and **Example 4**, page 18 of the Annex.

2. Several UVCB intermediates, and their production process, are characterised by a **low emission potential due to the physical form** of the intermediate manufactured or used.

This includes massive forms or granules, as well as wetted materials. In such cases, Rigorous Containment conditions can be reached and proven at lower "containment strategies". The low emission potential, together with the knowledge of the hazard of the intermediate and its physico-chemical properties, are used to design a containment that will assure the emission potential is kept low.

One typical example is when solid massive materials are handled by means of crane and fork stapler only, and so direct contact of workers with the material is prevented. Another example is when humidity controls and evaporation preventions are applied to wetted materials kept in bowl- or pan-like systems.

Examples:

- Intermediates may be in massive form. For example, Doré will be in massive large blocks up to 2 tons each. These blocks are handled and stored in way that takes into account form, low- or no-dustiness and weight:

- Blocks are stored on a sealed surface in an open area with a drainage collection
- Blocks are handled via forklift, front loader and overhead crane. They are transferred in moulds, barrels or by crane, to be fed directly into the furnace

This is further detailed in **Example 5**, Page 23 of the Annex

- Intermediates may be present as wet cake. For example, after **electrolytic refining, the** isolated slime cake has a water content of 20 to 30%. It is therefore of low dustiness (measurements on totally dry samples show density of ca. 4 to 5 g/cm$^3$).

This is further detailed in **Example 3**, Page 14 of the Annex.

3. **Local Exhaust Ventilation (LEV) techniques** applied in metals smelting and refining **are designed for particular production conditions** such as high temperature and high air flow volume.

These conditions require additional exposure barriers to those applied in other industrial processes. Water curtains and pressurised systems are among the most popular equipment used in the design of the air- and fume-capturing systems used in the metals industry; more examples can be retrieved from the NFM BREF.

Example:

Local exhaust ventilation is often integrated with partial enclosures, and other technical measures are applied, as indicated in the BAT (*Reference Document on Best Available Techniques in the Non Ferrous Metals Industries December 2001, paragraph 2.7.2 , Figure 2.27: Secondary hooding system for a converter), e.g.*

- Capture hoods which form a partial enclosure
- Hoods are connected with local exhaust ventilation
- During filling and pouring operations the individual hoods are motor driven to the positions that ensure optimal collection efficiency.
- Automatic control of the blowing cycle of the converter and the fume collection system to prevent blowing while the converter is rolled out
- The crane and converter movements during filling and pouring operations are remote-controlled from a converter control room and crane cabin.
- Exhaust gases are treated in dust removal systems – bag filter or scrubber

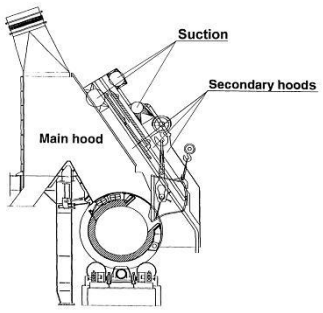

## 4. Personal Protective Equipment (PPE)

**PPE** is used for activities other than cleaning and maintenance because it may be legally mandatory, independent of a demonstrated need for risk management measures. A second reason is voluntary initiative by companies to prevent workers from being exposed during potential accidents/incidents.

Example: Pb in metal dross.

- PPE is legally required in some EU Member States to protect the workers from combined exposure to metals, molten metal and heat that may occur in the kettle area – related to the production of main metal and several intermediates associated with various metal refining steps.
- It is important to note that PPE is required for workers not just because they are exposed to this particular intermediate. The same workers are involved in all metal refining operations during an 8-hour shift, where there is a potential of exposure to that metal from other sources. Suitable effective respiratory protection, such as P2/P3, or P2 forced air helmet is used to minimise corresponding exposure.
- The use of PPE is also legally mandatory in some EU countries for all lead refining operations for an 8-hour shift, irrespective of the risk management measures in place (for example in Germany according to TRGS 505 - Technical guidance for hazardous substances - lead, Article 4.2.2 and Annex 2). For the above reasons, a medical surveillance programme is in place, and workers' lead blood levels are controlled. For human health, exposure (as measured blood lead levels) is below the DNEL of 40 µg/dL for male workers.
- Formal mask cleaning and filter changing strategies are in place.
- PPE, including heat resistant coveralls, safety shoes/boots, safety glasses or face shield, head protection, air filtration, hand protection and hearing protection, are deployed in every location where they are required.
- Additionally, standard "personal hygiene" measures are in place, such as washing hands and face on leaving area of potential contamination and showering at the end of shift.
- Workers involved in cleaning and maintenance activities are also provided with all necessary PPE as described above. Personal protective equipment is used in the hierarchy of protective measures as described in the Chemicals Agents Directive E 98/24/EC and Directive 2004/37/EC on the protection of workers from risk related to exposure to carcinogens or mutagens at work

This is further detailed in **Example 4**, page 21 of the Annex.